Cambridge International Examinations
Cambridge International General Certificate of Secondary Education

CANDIDATE NAME	
CENTRE NUMBER	
CANDIDATE NUMBER	

PHYSICS **0625/42**

Paper 4 Theory (Extended) **May/June 2017**

1 hour 15 minutes

Candidates answer on the Question Paper.

No Additional Materials are required.

READ THESE INSTRUCTIONS FIRST

Write your Centre number, candidate number and name on all the work you hand in.
Write in dark blue or black pen.
You may use an HB pencil for any diagrams or graphs.
Do not use staples, paper clips, glue or correction fluid.
DO **NOT** WRITE IN ANY BARCODES.

Answer **all** questions.
Electronic calculators may be used.
You may lose marks if you do not show your working or if you do not use appropriate units.
Take the weight of 1 kg to be 10 N (acceleration of free fall = 10 m / s^2).

At the end of the examination, fasten all your work securely together.
The number of marks is given in brackets [ ] at the end of each question or part question.

The syllabus is approved for use in England, Wales and Northern Ireland as a Cambridge International Level 1/Level 2 Certificate.

This document consists of **20** printed pages.

DC (ST/JG) 129079/5
© UCLES 2017

CAMBRIDGE International Examinations

www.root19.com +91 - 9969 353 391

1 (a) (i) Speed is a scalar quantity and velocity is a vector quantity.

State how a *scalar* quantity differs from a *vector* quantity.

.....

.....[1]

(ii) Underline the **two** scalar quantities in the list below.

energy **force** **impulse** **momentum** **temperature** [1]

(b) A boat is moving at constant speed.

On Fig. 1.1, sketch a distance-time graph for the boat.

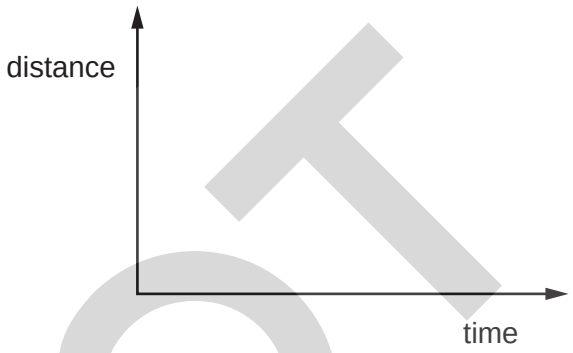

Fig. 1.1

[1]

© UCLES 2017

www.root19.com
+91 - 9969 353 391

(c) The boat in **(b)** is moving due west at a speed of 6.5 m/s relative to the water. The water is moving due south at 3.5 m/s.

In the space below, draw a scale diagram to determine the size and direction of the resultant of these two velocities. State the scale used.

scale .....

size of resultant velocity = ...

direction of resultant .....

[4]

[Total: 7]

© UCLES 2017
www.root19.com

+91 - 9969 353 301

2 Fig. 2.1 shows a vehicle designed to be used on the Moon.

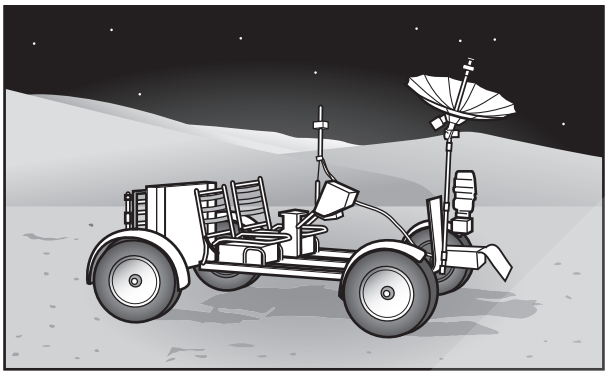

Fig. 2.1

The brakes of the vehicle are tested on Earth.

(a) The acceleration of free fall on the Moon is one sixth ($\frac{1}{6}$) of its value on Earth.

Tick **one** box in each column of the table to predict the value of that quantity when the vehicle is used on the Moon, compared to the test on Earth.

	mass of vehicle on Moon	weight of vehicle on Moon	deceleration of vehicle on Moon with same braking force
10 × value on Earth			
6 × value on Earth			
same as value on Earth			
$\frac{1}{6}$ × value on Earth			
$\frac{1}{10}$ × value on Earth			

[3]

© UCLES 2017

www.root19.com +91 - 9969 353 391

(b) Fig. 2.2 shows the brake pedal of the vehicle.

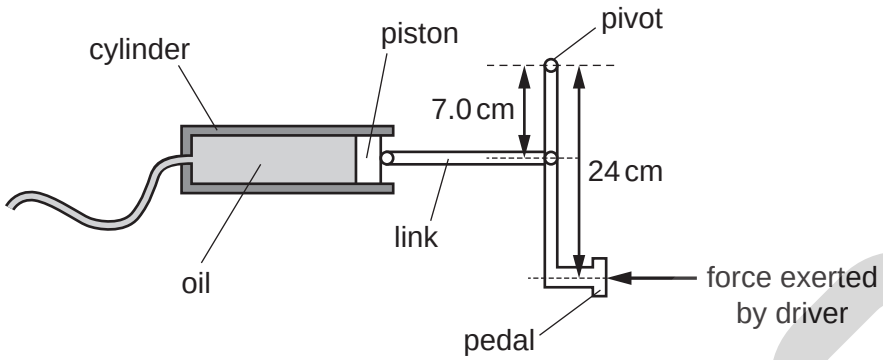

Fig. 2.2 (not to scale)

The driver exerts a force on the pedal, which increases the pressure in the oil to operate the brakes.

The area of the piston in the cylinder is $6.5 \times 10^{-4}\,m^2$ ($0.00065\,m^2$). The pressure increase in the oil is $5.0 \times 10^5\,Pa$ ($500\,000\,Pa$).

Calculate the force exerted by the driver on the brake pedal.

force = ...[4]

[Total: 7]

3 **(a)** Underline the pair of quantities which must be multiplied together to calculate *impulse*.

force and mass	force and velocity	mass and time
time and velocity	weight and velocity	force and time [1]

(b) Fig. 3.1 shows a collision between two blocks A and B on a smooth, horizontal surface.

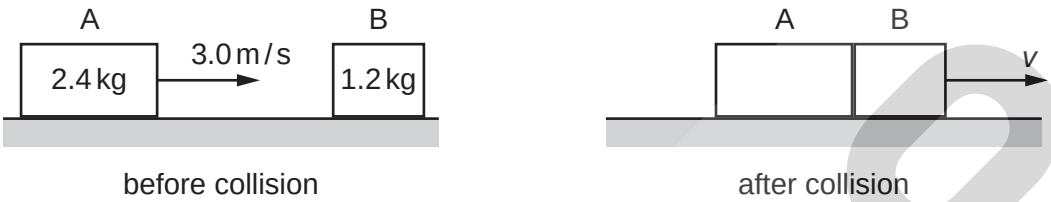

Fig. 3.1

Before the collision, block A, of mass 2.4 kg, is moving at 3.0 m/s. Block B, of mass 1.2 kg, is at rest.

After the collision, blocks A and B stick together and move with velocity *v*.

(i) Calculate

1. the momentum of block A before the collision,

momentum = ...[2]

2. the velocity *v*,

velocity = ...[2]

3. the impulse experienced by block B during the collision.

impulse = ...[2]

(ii) Suggest why the total kinetic energy of blocks A and B after the collision is less than the kinetic energy of block A before the collision.

.....

.....[1]

[Total: 8]

www.root19.com +91 - 9969 353 391

4 A balloon contains a fixed mass of gas.

(a) Explain, in terms of the momentum of molecules, how the gas in the balloon exerts a pressure.

.....

.....

.....

.....[2]

(b) Explain, in terms of molecules, why the pressure of the gas increases when the volume of the balloon decreases. The temperature of the gas is constant.

.....

.....

.....

.....[2]

(c) The initial volume of the gas is 500 cm^3 and its pressure is 1.1×10^5 Pa. The volume is reduced to 200 cm^3. The temperature of the gas is constant.

Calculate the new pressure.

pressure = ...[2]

[Total: 6]

www.root19.com +91 - 9969 353 301

5 **(a)** **(i)** An electric kettle contains 600 g of water at 20 °C. The heater in the kettle operates at 240 V. The specific heat capacity of water is 4200 J / (kg °C).

The current in the heater is 12 A.

Calculate the time taken for the temperature of the water to rise to 100 °C.

time = ...[4]

(ii) State **one** assumption you made in your calculation in **(a)(i)**.

.....[1]

© UCLES 2017
www.root19.com

+91 - 9969 353 391

(b) Using the apparatus shown in Fig. 5.1, describe an experiment to demonstrate good and bad emitters of thermal radiation. Include the expected results and the conclusion.

You may use a diagram.

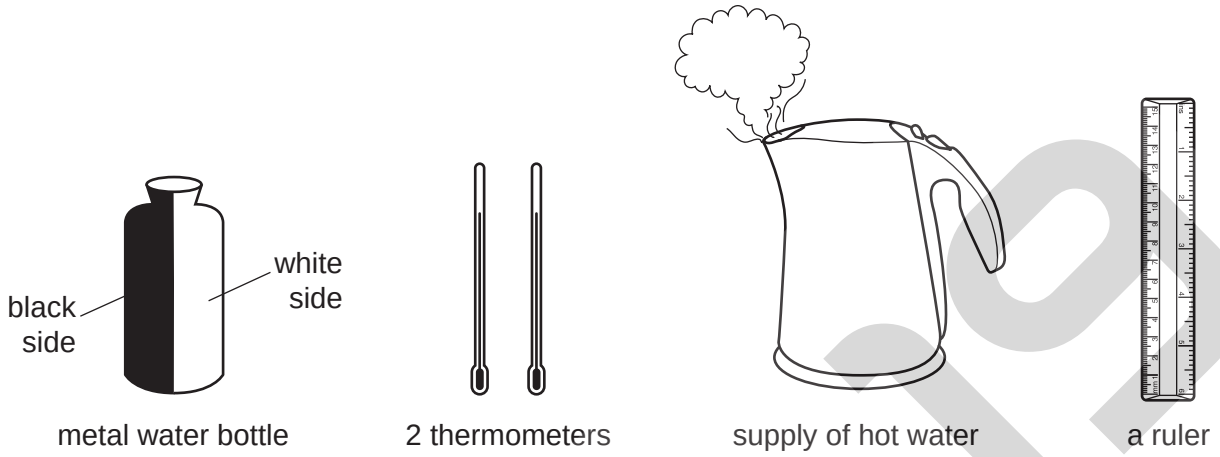

Fig. 5.1

.....

.....

.....

.....

.....

.....

.....

.....[4]

[Total: 9]

www.root19.com +91 - 9969 353 301

6 **(a)** The graph in Fig. 6.1 represents a wave on a rope.

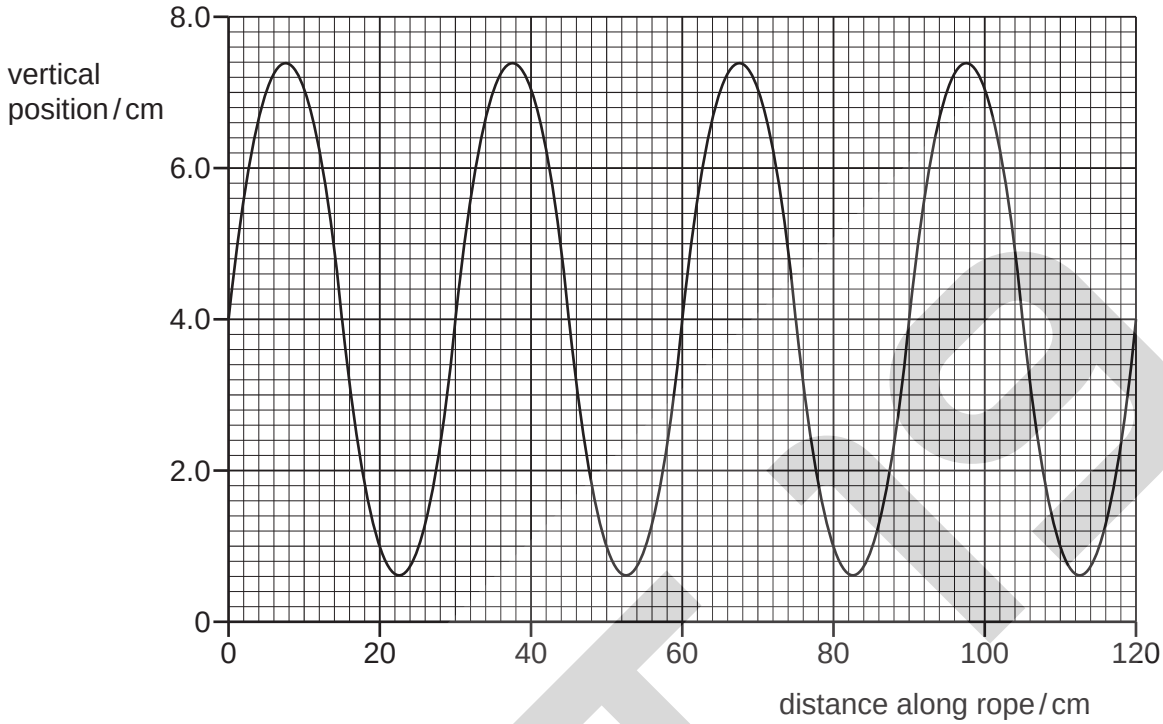

Fig. 6.1

Using Fig. 6.1, determine

(i) the amplitude of the wave,

amplitude = ...[1]

(ii) the wavelength of the wave.

wavelength = ...[1]

www.root19.com +91 - 9969 353 391

(b) A wave travelling on the surface of water has a wavelength of 2.5 cm and a speed of 8.0 cm / s.

Calculate the frequency of the wave.

frequency = ...[2]

(c) The wave in **(b)** approaches a barrier that has a large gap in its centre.

Fig. 6.2 shows the crests of the wave viewed from above.

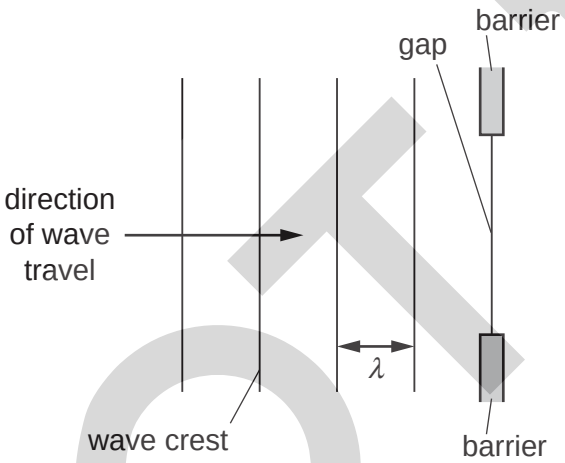

Fig. 6.2

The gap in the barrier is larger than the wavelength λ.

(i) On Fig. 6.2, draw the pattern formed by three crests after the wave passes through the gap in the barrier. [2]

(ii) Water is added to the tank and the speed of a wave in the deeper water is greater than that in the shallower water. The frequency of the wave remains constant but its wavelength is different.

1. State and explain how the wavelength in the deeper water has changed.

.....

.....[1]

2. Apart from the change in wavelength, describe **one** other difference in the pattern formed by the crests after the wave passes through the gap.

.....

.....[1]

[Total: 8]

www.root19.com +91 - 9969 353 301

7 **(a)** The speed of light in air is 3.0×10^8 m/s.
The speed of light in a transparent liquid is 2.0×10^8 m/s.

A ray of light is incident on the surface of the liquid at an angle of incidence of 40°.

Calculate

(i) the refractive index of the liquid,

refractive index = ...[2]

(ii) the angle of refraction in the liquid.

angle of refraction = ...[2]

www.root19.com +91 - 9969 353 391

(b) Fig. 7.1 shows a side view of an object at the bottom of a tank of liquid. Light travels slower in this liquid than in air.

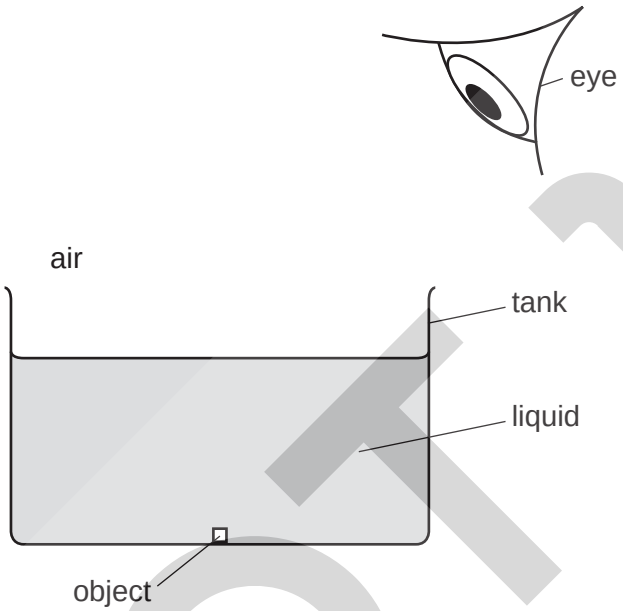

Fig. 7.1

On Fig. 7.1, draw **two** rays from the object into the air. Use these rays to locate the image. Label this image I. [3]

[Total: 7]

www.root19.com +91 - 9969 353 301

8 Fig. 8.1 shows a 12.0 V power supply connected in a circuit.

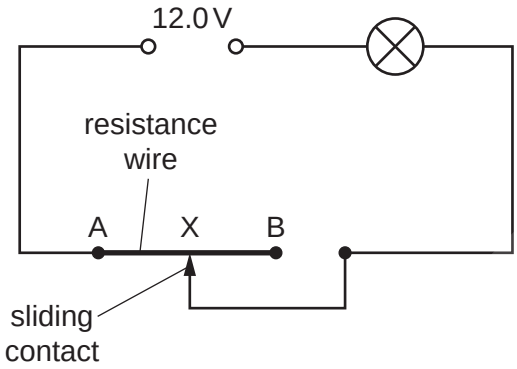

Fig. 8.1 (not to scale)

The circuit includes a lamp and a resistance wire AB of constant cross-sectional area. There is a sliding contact that can be moved between A and B.

(a) The rating of the lamp at normal brightness is 6.0 V, 9.0 W.

Calculate

(i) the current in the lamp at normal brightness,

current = ...[2]

(ii) the resistance of the lamp at normal brightness.

resistance = ...[2]

www.root19.com +91 - 9969 353 391

(b) AB is 1.00 m long and has a resistance of 5.0 Ω. The lamp has normal brightness when the sliding contact is at X.

(i) The sliding contact is moved to B.

Explain, without a calculation, why the lamp becomes dimmer.

.....

.....

.....[1]

(ii) Calculate the distance AX for the lamp to have normal brightness.

distance AX = ...[3]

[Total: 8]

© UCLES 2017

www.root19.com
+91 - 9969 353 301

9 Fig. 9.1 shows a horizontal wire PQ placed in the gap between the N pole and the S pole of a magnet.

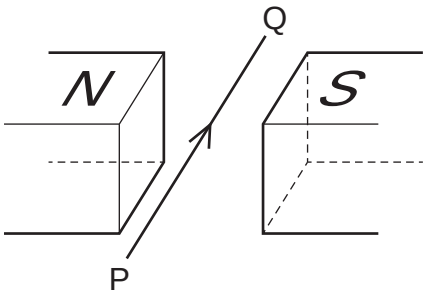

Fig. 9.1

There is a current in the wire in the direction P to Q.
A force acts on the current-carrying wire in the magnetic field.

(a) On Fig. 9.1, draw

(i) an arrow, labelled M to show the direction of the magnetic field in the gap between the poles of the magnet, [1]

(ii) an arrow, labelled F to show the direction of the force on the current-carrying wire due to the magnetic field of the magnet. [1]

(b) State the effect of reversing the direction of the current in wire PQ.

.....[1]

(c) The magnet is removed and the horizontal, current-carrying wire is left on its own, as shown in Fig. 9.2.

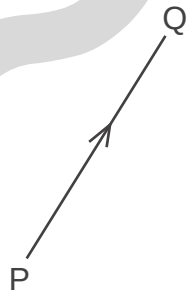

Fig. 9.2

(i) On Fig. 9.2, sketch the pattern of the magnetic field due to the current in the wire. Indicate the field direction. [3]

(ii) The current in PQ is **increased**.

State the effect of this change in current on the magnetic field.

.....[1]

www.root19.com +91 - 9969 353 391

(d) A small magnet is placed at a point where the magnetic field is vertically upwards. State the direction of the force on the S pole of the small magnet.

.....

.....[1]

[Total: 8]

© UCLES 2017

www.root19.com
+91 - 9969 353 301

10 **(a)** In the space, draw the standard symbol for a light-emitting diode (LED).

[1]

(b) Table 10.1 shows the truth table for a logic gate.

Table 10.1

input 1	input 2	output
0	0	1
0	1	0
1	0	0
1	1	0

State the name of the logic gate which has this truth table.

.....[1]

(c) It is possible to connect together the two inputs of the gate in **(b)**.

Using two or more of the logic gates in **(b)**, design a circuit with two inputs and one output which has the truth table shown in Table 10.2.

Table 10.2

input 1	input 2	intermediate point, X	output
0	0		0
0	1		1
1	0		1
1	1		1

(i) Draw your circuit in the space below.

There is no need to use the symbol for the logic gate. Boxes with the two inputs and one output are sufficient.

[2]

(ii) Label an intermediate point of your circuit with the letter X. Complete the table with the logic levels for this point in the blank column of the table. [1]

[Total: 5]

www.root19.com +91 - 9969 353 391

11 **(a)** The arrows in Fig. 11.1 represent the paths of three α-particles moving towards gold nuclei in a thin foil. The gold nuclei are shown as shaded circles.

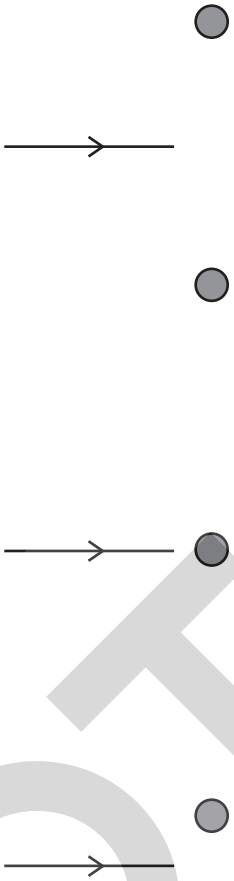

Fig. 11.1

On Fig. 11.1, complete the paths of the three α-particles. [3]

© UCLES 2017

www.root19.com
+91 - 9969 353 301

(b) Fig. 11.2 shows a geologist holding a radiation detector near a rock.

Fig. 11.2

She holds the detector in a fixed position and records the readings shown in Table 11.1.

Table 11.1

time / minutes	0	1	2	3	4	5
detector reading / counts / minute	16	14	17	13	17	15

Explain the changes in the detector readings.

.....

.....

.....

.....[2]

(c) A technician is handling a solid radioactive sample that emits α-particles and β-particles.

The technician wears thick rubber gloves.

Explain why this may provide some protection from the radiation, but it is not sufficient protection.

.....

.....

.....

.....[2]

[Total: 7]

Permission to reproduce items where third-party owned material protected by copyright is included has been sought and cleared where possible. Every reasonable effort has been made by the publisher (UCLES) to trace copyright holders, but if any items requiring clearance have unwittingly been included, the publisher will be pleased to make amends at the earliest possible opportunity.

To avoid the issue of disclosure of answer-related information to candidates, all copyright acknowledgements are reproduced online in the Cambridge International Examinations Copyright Acknowledgements Booklet. This is produced for each series of examinations and is freely available to download at www.cie.org.uk after the live examination series.

Cambridge International Examinations is part of the Cambridge Assessment Group. Cambridge Assessment is the brand name of University of Cambridge Local Examinations Syndicate (UCLES), which is itself a department of the University of Cambridge.